FRIDURIT®

FRIDURIT® fume scrubber

Technical description | June 2008

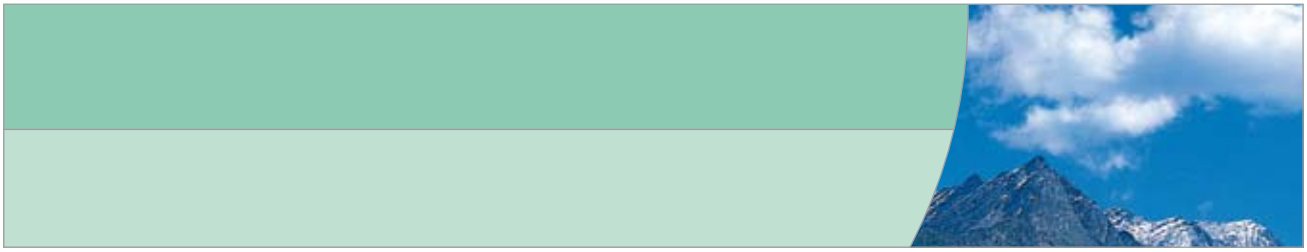

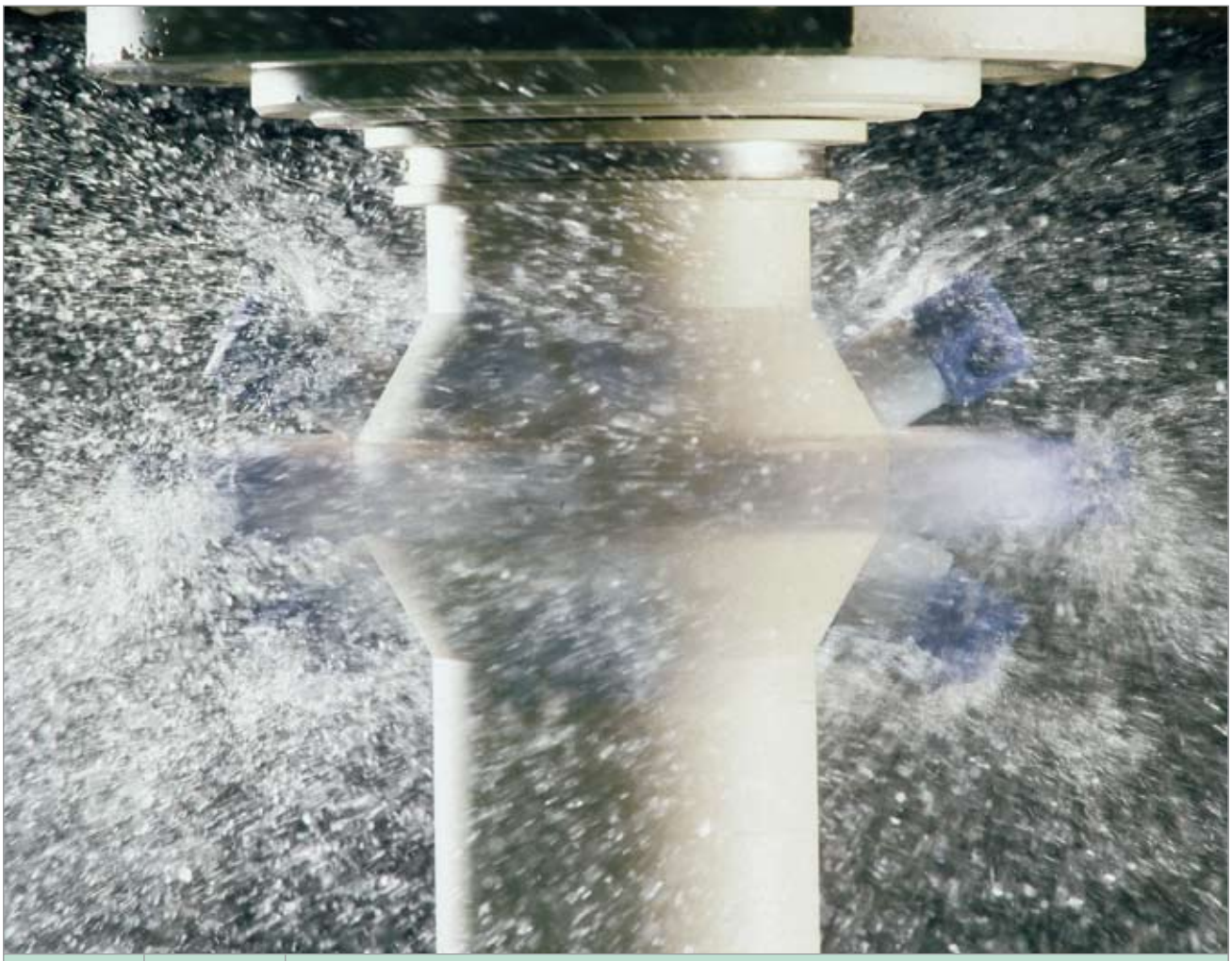

TÜV CERT DIN EN ISO 9001:2000 Zertifikat: 01 100 070754

TÜV CERT DIN EN ISO 14001 Zertifikat: 01 104 042131

Safety and competence for successful laboratory projects

FRIATEC

Legal notice

Editor

The specifications of our products are based on extensive technical development and on the results of stringent tests. We have gained experience in diverse areas of application over many years with FRIDURIT environmental technology. However, the user is responsible for checking our specification and, if necessary, confirming the suitability by conducting his own tests.

We reserve the right to make technical alterations.

FRIATEC Aktiengesellschaft
Ceramics Division
Steinzeugstrasse 50
68229 Mannheim
Germany

Technical Department laboratory equipment
Phone: +49 621 486-1592
Fax: +49 621 486-1605
info-fridurit@friatec.de
www.friatec.de

This catalogue is also available as a pdf file.
Please refer to the address mentioned above.

June 2008

FRIDURIT®

FRIDURIT® fume scrubber

Technical description | Index

FRIDURIT® fume scrubber

Introduction

Preface

As a planner, laboratory builder or user of a laboratory environment, you are interested in fitting a fume scrubber in a fume extraction unit. This Technical Description will provide you with comprehensive information regarding the FRIDURIT fume scrubber as a basis for planning your work.

Should you have any questions that cannot be answered by this documentation, we will be pleased to supply you with information and support. You will find contact data as well as the contact person at the end of this brochure or on the Internet at www.fridurit.de.

Fig. 1)
FRIDURIT fume scrubber in compact design

Laboratory fume cupboard and FRIDURIT® fume scrubber

The FRIDURIT fume scrubber is a device for installation in laboratory fume cupboards for high-temperature digestion (fume extraction). The scrubber purifies the contaminated exhaust air there generated. The scrubber reliably absorbs aggressive and toxic gases at source.

The fume scrubber is generally fitted directly into the fume cupboard ceiling or next to the fume cupboard. It there operates quietly and inconspicuously. It is simple to install, easy to service and extremely robust.

Fig. 2)
FRIDURIT neutraliser unit C100 as optimum complement

System solution:
The waste water produced when the fume scrubber is in operation can be neutralised by the FRIDURIT C100 neutraliser unit, available as an option, and can thus be fed directly into the public waste water network.

FRIDURIT® fume scrubber performance

- Fully automatic exchange of scrubbing liquid during operation, without interruption of scrubbing mode
- Maximum absorption efficiency through patented atomised spray system
- Increased service life of ventilation components, e.g. exhaust air pipes, fire protection and control flaps, noise dampers and fans
- In the event of a fire, the FRIDURIT fume scrubber virtually acts as a flame arrester
- Environmental protection and increased safety in the laboratory

Easy to operate and convenient

- Equipment can be built in and installed next to the fume cupboard or in an adjoining room
- Compact and space saving
- Quiet
- Easy to operate
- Ready for connection, thus simple to install
- Connecting neutraliser units possible
- Operation and fault report to building management possible
- Extensive accessories available
- Simple, reliable design

Manufacturer's experience and expertise

- FRIDURIT Laboratory Technology is a long-standing supplier of fume scrubbers and neutraliser units with its own development department
- Service department experienced at home and abroad
- Spare parts supplied quickly and reliably
- All equipment tested
- DIN EN ISO 9001 and DIN EN ISO 14001 certification
- Continuous further development and optimisation through close cooperation with laboratory furniture companies

FRIDURIT® fume scrubber

System properties and equipment versions

System properties

The FRIDURIT fume scrubber, in combination with fume cupboards, absorbs the aggressive and toxic gases drawn off by these, gases such as perchloric acid, hydrofluoric acid, sulfuric acid, hydrochloric acid, nitric acid and mixtures thereof, and thus contributes to maintaining clean air and preserving the building substance.

Materials:
All parts of the housing as well as the patented spraywheel in the FRIDURIT fume scrubber are made of polypropylene. No toxic gases are produced in the event of a fire.

Control unit:
The control and monitoring elements necessary for operation are accommodated in a compact plastic switchbox that has been fully integrated in the fume scrubber housing. The use of a modern, electronic control unit ensures that the FRIDURIT fume scrubber always functions safely. Numerous interfaces allow the control unit to be linked simply and flexibly to additional components and building facilities.

Corrosion protection:
The FRIDURIT fume scrubber can greatly assist in preventing corrosion damage to air outlet pipes, fire protection and control flaps and noise dampers as well as the roofing and other parts of a building, and can considerably extend the service life of the parts.

Fire protection:
In the event of a fire, the FRIDURIT fume scrubber virtually acts as a flame arrester, i.e. deflagration due to a fire starting in the fume cupboard can be prevented from getting through to the air outlet pipe or can be slowed down. The water filling in the scrubber has an evaporative cooling effect.

Equipment versions

The FRIDURIT fume scrubber is available in four versions:

- Types C54 and C90 were developed for installation in the laboratory fume cupboard.
- Types C75 and C180 are intended as free-standing units for installation next to the laboratory fume cupboard, but can also be installed at other work places where pollutants are emitted.

The installation examples on page 15 clearly show the various possibilities for the use of built-in and free-standing devices. See also the technical drawings with equipment dimensioning starting on page 19 as well as the technical data on page 11.

The FRIDURIT® fume scrubber

Fig. 1 shows the FRIDURIT fume scrubber, Type C54/C90 (built-in unit).

❶ Integrated control unit:
Contains all control and monitoring elements.

❷ Repair switch:
Isolates the control unit from the main power supply for servicing.

❸ Operating mode selector switch:
Enables switching between automatic and manual operation (as well as „0"/Off).
Manual operation provides the option of emptying the scrubbing liquid supply chamber completely. However, this should only be performed by servicing staff for the purpose of maintenance and repair.

❹ Inspection window:
Enables visual check of the absorption chamber.

❺ Feed fittings for mounting tap water connection (see Fig. 4).

❻ Drainage fittings for mounting the scrubbing liquid drainage (see Fig. 5).

❼ 2 float switches for regulating the filling level (minimum and maximum).

❽ Clean air tube for the purified exhaust air leaving the fume cupboard.

❾ Removable covers for accessing the absorption chamber.

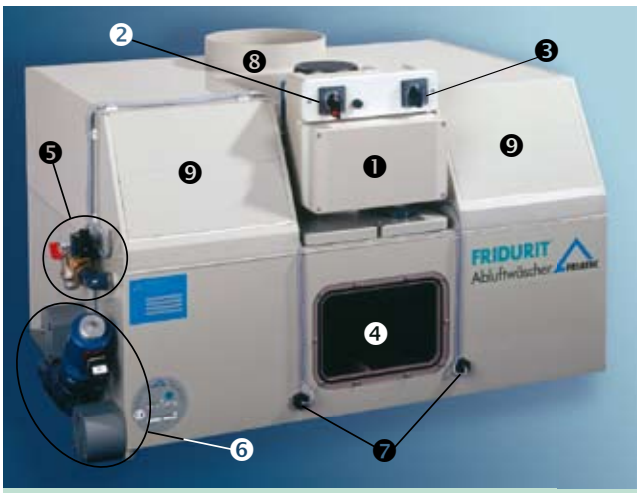

Fig. 3)
FRIDURIT fume scrubber C54/C90

Feed

The feed fittings, consisting of a water feeder ❶ with manual ball valve ❷, soil trap ❸ and solenoid feed valve ❹, are located on the left-hand side of the fume scrubber. A hose or tube connector is used to join the water feed to the tap water supply pipe. The solenoid valve is linked to the control unit by means of a connection plug ❺.

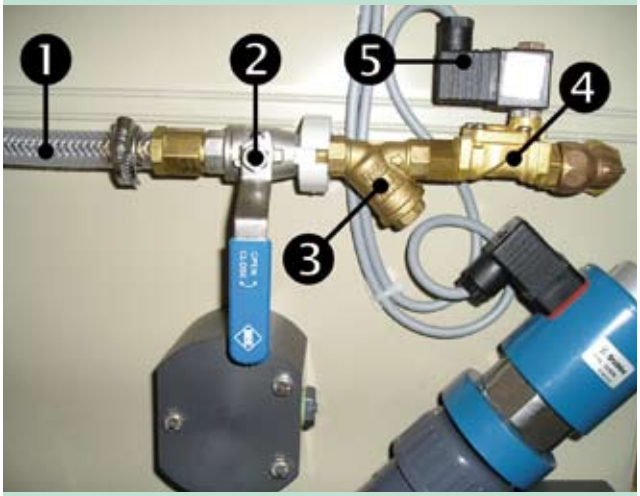

Fig. 4)
Feed fittings

Fig. 5)
Drainage

Drainage

The drain on the FRIDURIT fume scrubber is used for emptying the equipment during automatic exchange of the scrubbing liquid and as a safety overflow. The drainage fittings (see Fig. 1 and 3) can likewise be found on the left-hand side of the fume scrubber. They consist of a drain ❶, an overflow ❷ as well as a solenoid drain valve ❸. The drainage fittings are detachable so that a drainage hose can be connected even if space is restricted.

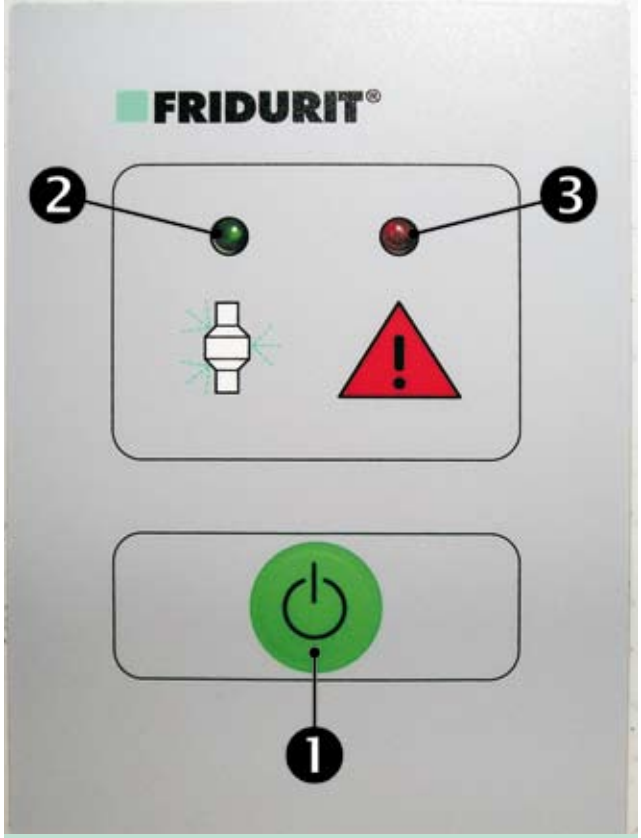

Fig. 6)
Operating module

Operating module

Using the separate FRIDURIT operating module, the fume scrubber can be switched off when the fume cupboard is in operation[1]. Its membrane key and bright LEDs ensure reliable operation and control of the scrubbing function.

❶ Operating button:
Switches the fume scrubber on and off[1].

❷ Operating light:
Illuminated when the equipment is running, flashes for faults with the tap water feed.

❸ Fault light:
Flashes for malfunctions.

[1] *For certain applications, the operating button is disabled. In this case, please refer to the operating instructions for the laboratory fume cupboard.*

Free-standing units, C75 and C180

In contrast to the C54/C90 built-in units, the operation elements for types C75/C180 are located in the switchbox behind the equipment cover. Otherwise, the free-standing units are equipped in the same way as the built-in units with regard to the operation elements (see preceding section).

In contrast to the built-in units, the sanitary connections are located on the back of the scrubber between the plastic rails. The feed and drainage fittings are supplied loose so that they can be installed in a way accessible to the user. The electrical connection leads between the solenoid valves and the integrated control unit must be prepared on site. The plug connections necessary for this are supplied.

See also the technical drawings with equipment dimensioning on pages 21 and 22.

Fig. 7)
FRIDURIT fume scrubber as free-standing unit (in this case type C180). All operation elements are located in the integrated switchbox behind the equipment cover.

FRIDURIT® fume scrubber

Function

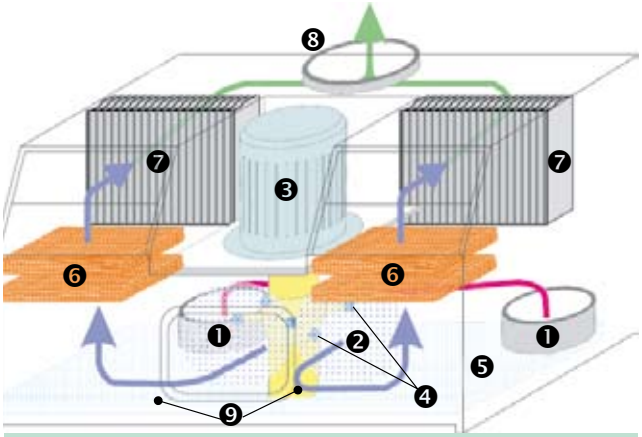

Fig. 8)
Functional description of the FRIDURIT fume scrubber type C54. Types C90, C75 and C180 are nearly identical.

How the FRIDURIT® fume scrubber works

Equipment components:

❶ Noxious gas tubes
❷ Absorption chamber
❸ Spraywheel
❹ Spray nozzles
❺ Reservoirs with scrubbing liquid
❻ Agglomerators
❼ Droplet separators
❽ Clean air tube
❾ Float switches

Air flows (illustrated by arrows):

Pink	Noxious gas flow
Blue	Noxious gas in the absorption system
Green	Clean air outflow

The noxious gases produced in the fume cupboard are suctioned up by the vacuum generated by the fume cupboard fan via two noxious gas tubes ❶ into the absorption chamber ❷ of the FRIDURIT fume scrubber. The patented spraywheel ❸, developed especially for this purpose, is located here and performs two functions at the same time:

1. It sucks the scrubbing liquid from the reservoir ❺.
2. The spray nozzles ❹ nebulize the scrubbing liquid, thereby evenly distributing it in the absorption chamber.

This ensures that the noxious gases are thoroughly and optimally mixed with the scrubbing liquid, thus leading to a highly effective degree of absorption. The intensive swirling of exhaust air, noxious gases and fluid mist allows the absorption levels for the acids most commonly used in a laboratory to exceed 90%.

The atomized spray is then separated from the exhaust air by the absorption systems – the agglomerators ❻ and the droplet separators ❼. The scrubbed exhaust air is dried by the absorption systems before leaving the fume scrubber through the clear air tube ❽.

The fine droplets of scrubbing liquid spray enriched with chemicals condense on the plastic netting of the agglomerators ❻ to become larger drops of water and are fed back into the scrubbing liquid reservoir via the droplet separators ❼.

The level of the scrubbing liquid is regulated by two float switches ❾. When a preset filling level is reached, the supply of water is automatically stopped by means of a controlled solenoid valve. In order to prevent unlimited overfill in the event of a malfunction of the float switches or of the solenoid valve, the water feed-in automatically switches off after 20 minutes. The exchange of the scrubbing liquid is time-controlled and takes place fully automatically after a settable time interval (usually 16 hours of operation). The FRIDURIT fume scrubber remains fully functional even while this exchange takes place.

The fan required for operation is not integrated in the equipment but is installed by the customer, usually outside the laboratory.

Overview of technical data

	FRIDURIT® fume scrubber C54	FRIDURIT® fume scrubber C90	FRIDURIT® fume scrubber C75	FRIDURIT® fume scrubber C180
Arrangement:	Installation in the fume cupboard ceiling		Installation next to the fume cupboard or free-standing	
Materials used (parts with media contact)	Housing and spraywheel: polypropylene, fittings: PVC-U, seals: EPDM/PTFE			
Ventilation data:				
Air flow in m³/h	480 - 900	600 - 1400	480 - 750	600 - 1800
Pressure loss in Pa	200 - 530	260 - 1140	320 - 540	160 - 1020
Air inlet	2 tubes DN 200 (underside)	2 tubes DN 200 (underside)	Block flange DN 200	flanged tube DN 250
Air outlet	1 tube DN 250	1 tube DN 250	1 flange DN 200	1 flange DN 315
Dimensions and weights:				
Width in mm	950	1220	550	850
Depth in mm	710	710	750	750
Height in mm	550	550	1535	1535
Water volume in litres, approx.	45	60	45	70
Weight empty in kg, approx.	90	110	90	120
Total weight in kg, approx. (filled)	135	170	135	190
Water connection:				
Feed	DN 10	DN 10	DN 10	DN 10
Drainage	DN 32	DN 32	DN 20	DN 20
Overflow	DN 32	DN 32	DN 32	DN 32
Inspection openings:				
Inspection cover	2	2	1	2
Viewing window, front	Yes	Yes	No	No
Electrical control:				
Control unit	Plastic housing with programmable logic controller (PLC), switch unit for spraywheel motor, operating mode selector switch, repair switch, plug-in connector for accessories, operating module with membrane keyboard.			
Power supply	Three-phase 400/230 Volt, 50 Hz, 3L/N/PE, 0.75 kW. Connection using plug-in connector[2].			
Level control	2 float switches for minimum and maximum filling levels,1 solenoid feed valve with soil trap and manual ball valve, 1 solenoid drain valve.			
Scrubbing liquid exchange	Time-dependent control, times can be set within wide range[3], optional using conductivity measurement.			
Optional accessories	Probe with integrated measuring amplifier for measuring electrical conductivity, pre-alkalisation unit for scrubbing liquid. Additional accessories in the respective chapter.			
Protection type	Motor IP 54, control unit rear IP 40, front IP 54 with hood closed.			

[2] *Version depends on fume cupboard requirements.*

[3] *Settings carried out by FRIDURIT Service staff*

FRIDURIT® fume scrubber

Scope of supply and accessories

Scope of supply

The standard FRIDURIT fume scrubber is supplied complete and ready to operate with an integrated control unit.

A separate FRIDURIT operating module with switch and LEDs, which is installed and connected in the fume cupboard, is also included as a standard feature.

Accessories

FRIDURIT Laboratory Technology provides a complete system for fume cupboards which includes the following components and/or accessories (available separately) to complement the FRIDURIT fume scrubber:

FRIDURIT C100 neutraliser unit:
This unit for treating the waste water generated in the FRIDURIT fume scrubber is connected downstream of the scrubber and can also be installed directly in the fume cupboard. The unit neutralises the acid-enriched scrubbing liquid as well as other acid or alkaline waste water generated in the laboratory (see “Legal environment” and “Installation examples”).

Conductivity probe:
This can be used to check the chemical contamination of the scrubbing liquid. The probe establishes the conductivity of the scrubbing liquid – measured in milliSiemens (mS). The higher the conductivity, the greater the chemical contamination. After a threshold value preset in the probe is reached, a fully automatic exchange of the scrubbing liquid is triggered. The conductivity probe required is supplied with permanently set activation values of 10 mS, 20 mS (factory setting) and 40 mS.

Alkalinisation unit for scrubbing liquid:
To achieve a higher absorption level for special applications, the scrubbing fluid in the fume scrubber is mixed with an alkali. The alkalinisation unit consists principally of an alkali tank, a dosing pump and a pH electrode for the fume scrubber.

Connection sets:
FRIDURIT Laboratory Technology supplies connection and cable sets suitable for the respective application. A suitable feed and drainage hose set, each with a hose 3 m long, including stainless steel clamps, is available for the sanitary installations.

Maintenance / Cleaning and inspection

The FRIDURIT fume scrubber requires very little maintenance due to its design and high-quality components. Nevertheless, it is necessary to have maintenance carried out every 6 to 12 months, even with little-used equipment, as damage can occur as a result of material fatigue. Maintenance work, including cleaning of the interior, the spraywheel and the absorption systems, should only be performed by trained specialists, e.g. a member of the FRIDURIT Service (see our "List of Service Companies" on the Internet at www.fridurit.de). Further-reaching regular inspections of the equipment can be carried out by the operating staff.

The following maintenance and inspection schedule provides an overview of the maintenance and inspection work to be performed regularly.

Maintenance and inspection work	Performed by	Maintenance interval			
		daily	monthly	semi-annually	annually
Visual check for leaks in the valves, housing and connection houses.	Operating staff	X			
Checking that plug-in connections on the fume scrubber and the valves are seated firmly.	Operating staff		X		
Visual check of the absorption chamber for deposits (sludge) on the floor.	Operating staff		X		
If deposits are found, draining off scrubbing fluid as fully as possible and thoroughly spraying out the interior.	FRIDURIT Service		as needed		
Cleaning the feed strainer in front of the solenoid feed valve (see Fig. 7, page 9).	Operating staff		X		
Function test of the control unit and the solenoid drainage valve (see Fig. 8, page 10).	FRIDURIT Service			X	
Function test and cleaning of optional conductivity sensor (if applicable)	FRIDURIT Service			X	
Complete inspection of the system (cleaning interior, absorption systems and spraywheel, inspection of entire control system).	FRIDURIT Service				X[4]

[4] *For intensively used systems (e.g. 24-hour operation) or with severe chemical contamination (concentrated acids and alkalis) as well as severe contamination of the equipment, the maintenance intervals should be shortened accordingly.*

Planning aids

Please refer to the following planning aids and also the files available on our Internet site at www.fridurit.de:

- Performance descriptions:
  Tender specifications, individually for each type of equipment.
- Checklist:
  For requesting advice tailored to your specific operational requirements from our technical department.
- Information on the C100 neutraliser unit:
  Technical description, performance description, etc.
- List of Service Companies.

Legal environment / Environmental protection legislation

The FRIDURIT fume scrubber helps you to fulfil the following legal requirements:

- Keeping within thresholds values for vaporous and gaseous inorganic substances (regulated by the Technical Instructions on Air Quality Control)
- Cleaning the exhaust air directly at the fume cupboard (in accordance with DIN 12924/Part 2)
- Minimizing the emissions from fume cupboards (see Guidelines for Laboratories, “BG Chemie” (chemical industry professional association), BGR 120
- Preventing the formation of toxic gases in the case of fire

The German Emission Control Act stipulates that harmful effects on the environment are generally to be kept to a minimum. Acidic waste water from fume scrubbers must be treated or neutralised before being passed into public waste water plants. The provisions of the Environmental Liability Act carry the additional consequence that high environmental standards and the lowest emissions possible must be strived for during the planning stage already (see also notes on quality management).

Connection with FRIDURIT® neutraliser unit C100

To neutralise the acidic waste water before it is fed into public waste water plants, the FRIDURIT fume scrubber is ideally combined with the FRIDURIT C100 neutraliser unit, also installed in the fume cupboard. Alternatively, the equipment can be connected to another system, e.g. a central neutraliser unit.

Installation examples

The following photographs show possible installation arrangements for our equipment.

The various types of FRIDURIT fume scrubbers are each shown in combination with the C100 neutraliser unit.

Fig. 9)
Fume cupboard with fume scrubber C54 and neutraliser unit C100

Fig. 10)
Fume scrubber C180 and neutraliser unit C100

Recommended water quality

The quality of the tap water used should comply with the requirements of the German Drinking Water Ordinance as malfunctions of the FRIDURIT fume scrubber can otherwise arise. If in doubt, please ask for more details from our Technical Department (see contact address at the end of this brochure). If the total hardness of the tap water is high, we recommend a pre-treatment unit or the use of de-mineralized/de-ionized water.

Suitable valves for operation with de-mineralized/de-ionized water are available on request from FRIDURIT Laboratory Technology.

Please note that we cannot assume any liability whatsoever for material damage or personal injury arising from failure to comply with these recommendations.

Water connection

The equipment requires water supply and drainage. In the case of the built-in units, the drainage and overflow pipes are already combined, and together form the drainage connection. The free-standing units are designed in such a way that overflow can be fed directly into a waste water pipe. The drainage connection is linked to the solenoid valve supplied (install so as to provide easy access) and then led to the neutraliser unit.

Feed:
Solenoid valve, closed in rest position, DN 10,
pressure range 0.2 - 16 bar, pilot controlled, 230 V, 50 Hz.

Drainage:
Solenoid valve, closed in rest position,
DN 20 (DN 32)[5], pressure range 0 - 0.15 bar (0.02 bar)[1],
directly controlled, 230 V, 50 Hz.

Overflow:
DN 32

A suitable hose set can be supplied as an accessory, together with the required connecting parts. Other than that, our scope of supply extends as far as the hose nozzle for the corresponding connection.

[5] As the C54/90 and C75/180 are arranged differently, please refer to the current performance description of the individual scrubber types or contact our Technical Department.

Electrical connection

The equipment requires a three-phase connection, 400V, 50Hz, 16 amps. The control unit on the equipment is supplied with electricity using a plug connector (Wieland GST18i5) and a cable approx. 1 metre long. An adapter cable for connecting to a standard three-phase socket, CEE 16 amps, is usually included. The potential-free contacts for the operation and fault indicators are wired to the pre-installed plug connector at the back of the control unit.

Ventilation connection

Our scope of supply also extends as far s the ventilation connections and tubes shown in the Technical Drawings.

Pressure loss

With regard to fan size, the air flow rate should be dimensioned in such a way that, even with increased pressure loss in the fume scrubber of up to 30% resulting from contamination of the absorption systems, fault-free operation of the exhaust air system is ensured.

The pressure losses stated in the Technical Data refer to the fume scrubber in a clean state. For safety reasons, a larger-sized fan or fume scrubber must be used in borderline cases. Should further details be required, please contact FRIDURIT Technical Department.

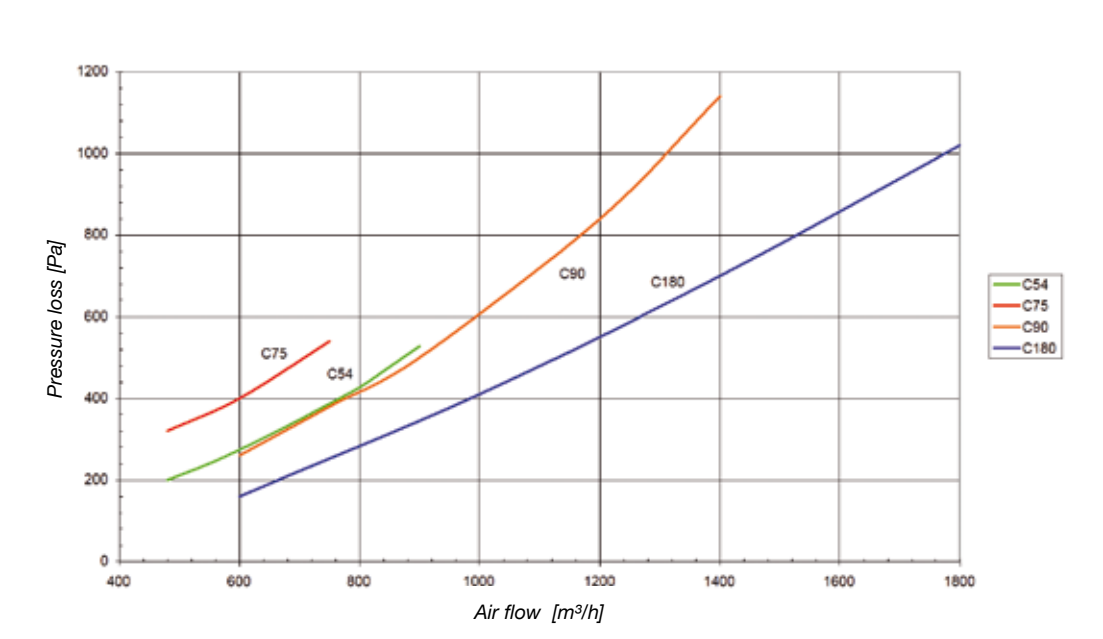

Fig. 11)
Pressure loss diagram

Mounting

FRIDURIT fume scrubbers are kept as compact as possible for mounting in fume cupboards. They are usually installed directly above the cupboard ceiling in the top (Types C54 and C90) or next to the cupboard (Types C75 and C180) and can easily be incorporated later into existing systems. These instructions relate to both built-in versions, Types C54 and C90. In order to ensure fault-free operation of these scrubber types, please observe the following points:

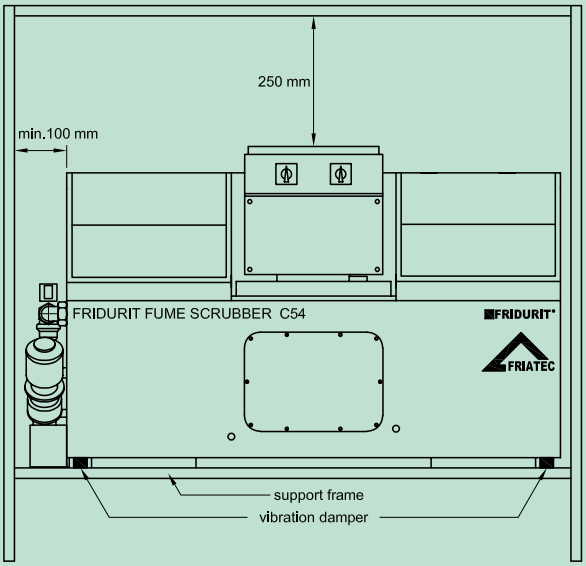

Fig. 12)
Installation example and required space of C54/C90

Mounting of type C54/C90

- The base for the FRIDURIT fume scrubber must enable level installation of the equipment.
- When designing the base and fixtures, the filled weight of the fume scrubber must be taken into account (see Technical Data).
- The equipment cannot be placed directly on the base as, due to the design, both sidewalls of the fume scrubber protrude approx. 18 mm over the lower edge. The equipment should therefore be placed on vibration dampers at suitable locations (see Fig. 12).

The following clearances must also be provided for maintenance and repair work (see Fig. 12):

- 250 mm between the upper edge of the fume scrubber and the upper edge of the top of the fume cupboard/ ceiling,
- 100 mm between the left-hand side of the fume scrubber and the cupboard wall.

Mounting of type C75/C180

- The base for the FRIDURIT fume scrubber must enable level installation of the equipment.
- When designing the base and fixtures, the filled weight of the fume scrubber must be taken into account (see Technical Data).

Furthermore, sufficient clearances must be provided for maintenance and repair work:

- 250 mm above the fume scrubber
- Wide ladder, approx. 500 mm in front of the fume scrubber
- There is no space required beside the fume scrubber

FRIDURIT® fume scrubber C54

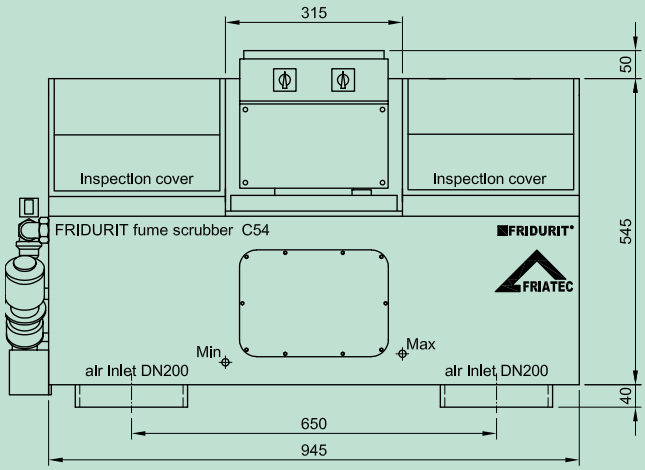

Fig. 13)
Front view

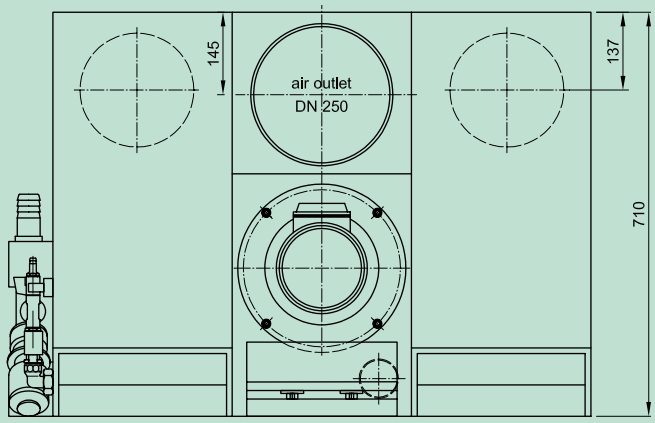

Fig. 14)
Top view

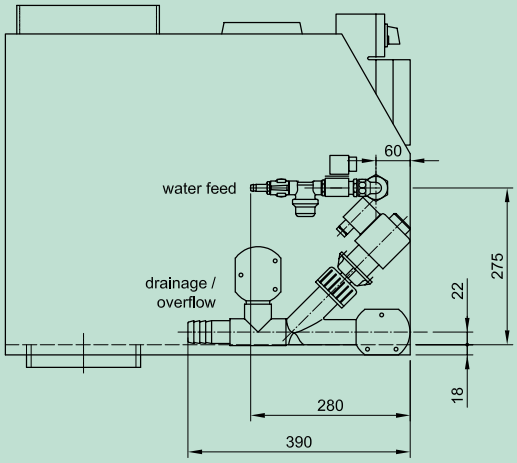

Fig. 15)
Side view

FRIDURIT® fume scrubber C90

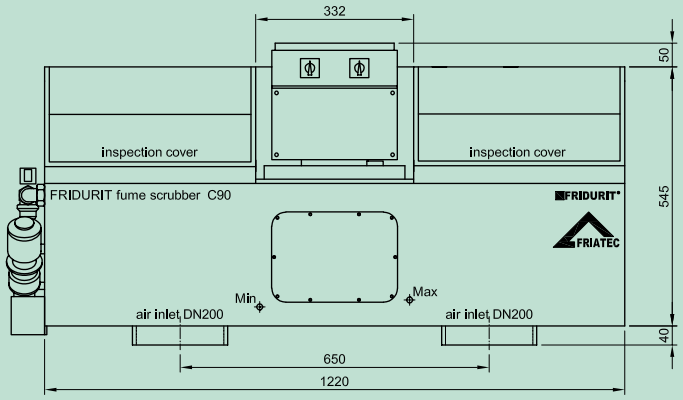

Fig. 16)
Front view

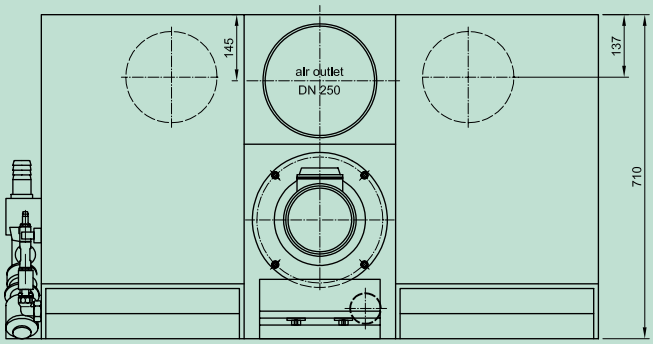

Fig. 17)
Top view

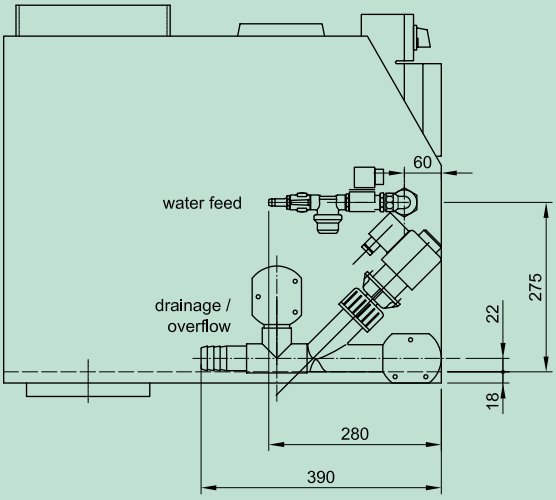

Fig. 18)
Side view

FRIDURIT® fume scrubber C75

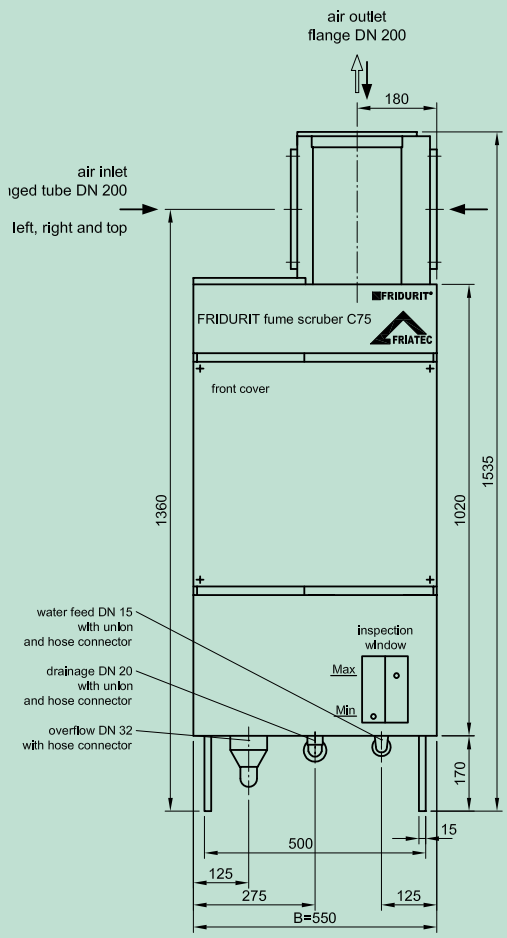

Fig. 19)
Front view

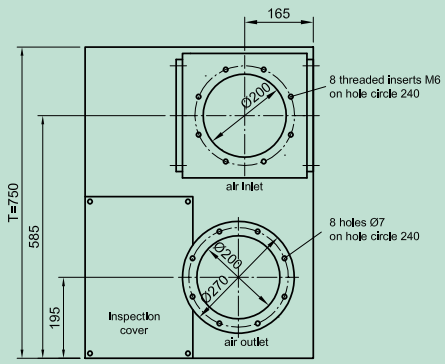

Fig. 20)
Top view

FRIDURIT® fume scrubber C180

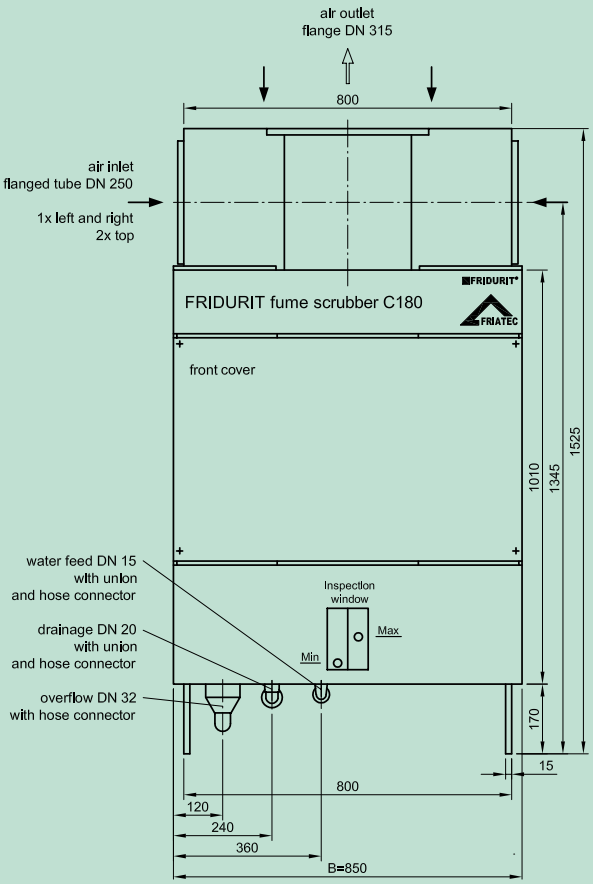

Fig. 21)
Front view

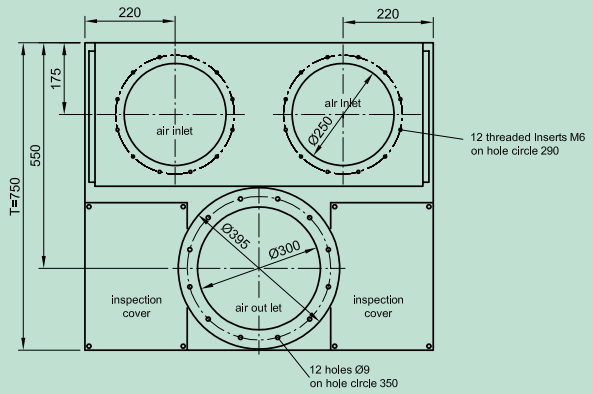

Fig. 22)
Top view

Quality management, certifications

FRIDURIT Laboratory Technology operates a policy of active quality management certified in accordance with DIN EN ISO 9001. Furthermore, the environmental management policy at FRIDURIT Laboratory Technology is certified in accordance with DIN EN ISO 14001.

Production control

All FRIDURIT fume scrubbers leave our factory following a strict quality control process and with settings at an optimum. This is ensured by a trial run and checking of all functions on the test stand.

CE compliance

We, FRIATEC AG, FRIDURIT Laboratory Technology, Steinzeugstrasse 50, 68229 Mannheim, Germany, declare in sole responsibility that the FRIDURIT C54 fume scrubber, the FRIDURIT C75 fume scrubber, the FRIDURIT C90 fume scrubber and the FRIDURIT C180 fume scrubber, to which this declaration refers, comply with the following standards and guidelines:

DIN 12924, Part 2	Fume cupboards for digestion at high temperatures
DIN EN 61000-6-1	Generic standard for interference resistance
DIN EN 61000-6-3	Generic standard for interference emissions
EN 61010-1	Safety requirements for electrical and electronic equipment for measurement, control and regulation processes
BGR 120	Guidelines for laboratories (BG Chemie)

Mannheim, March 1, 2007

ppa. Dr. Reinhard Grybowski
Division Manager

i.V. H.P. Cuntz

FRIDURIT® system solutions

Safety and competence for successful laboratory projects

FRIDURIT®

FRIDURIT® laboratory benchtops and sinks

made of Technical Ceramics
Highest resistance to virtually all chemicals commonly used in the laboratory. Low-maintenance and reliable due to scratch and abrasion proof surface. Non combustible and 100 % recyclable.

made of Polypropylene
Resistant to breakage, welded with no joints and easy to clean.

FRIDURIT® fume scrubber

Absorbs inorganic contaminants in the waste air from the laboratory

FRIDURIT® neutraliser unit

For safe neutralisation of laboratory effluent.
Fully automatic, quiet and reliable.

FRIDURIT is a registered brand of FRIATEC AG.

FRIATEC Aktiengesellschaft
Ceramics Division
Steinzeugstrasse 50
68229 Mannheim
Germany
Phone: +49 621 486-1879
Fax: +49 621 486-1605
www.friatec.de
info-fridurit@friatec.de

FRIATEC
an Aliaxis company

1815e · 0,5 · IX10 · bd